Specification sheet

BAULMANN

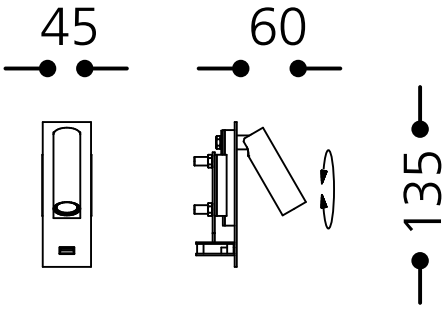

64.174.54

Surface:	Dark bronzed 54	wall luminaire dark bronzed, round
Lamp socket:	1 x LED integrated / 350 mA / 1 W	LED-head, incl. 1 watt LED warm white
Length:	140 mm	incl. LED driver (added as loose part)
Width:	45 mm	wall plate black, dim. ca. 140 x 45 mm
Outreach:	60 mm	with USB port, extension ca. 60 mm
Wattage:	1 W	
Voltage:	350 mA	
Protection class:	III	
Safety norm:	CE	
EEC-Light sources:	A++ - A	