# Specification sheet

BAULMANN

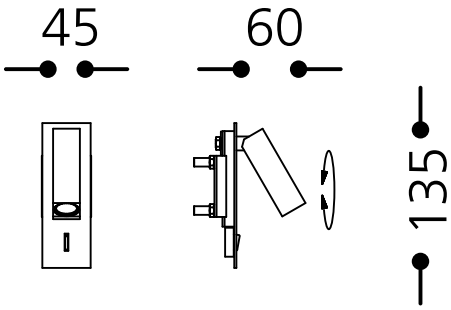


# 64.176.15

| | | |
|---|---|---|
| **Surface:** | Silver 15 | wall luminaire silver, square LED-head |
| **Lamp socket:** | 1 x LED integrated / 350 mA / 1 W | incl. 1 watt LED warm white |
| **Length:** | 135 mm | incl. LED driver (added as loose part) |
| **Width:** | 45 mm | dimensions wall plate ca. 135 x 45 mm |
| **Outreach:** | 60 mm | with slim rocker switch |
| **Switch:** | with narrow rocker switch | extension ca. 60 mm |
| **Wattage:** | 1 W | |
| **Voltage:** | 350 mA | |
| **Protection class:** | III | |
| **Safety norm:** | CE | |
| **EEC-Light sources:** | A++ - A | |

BAULMANN LEUCHTEN GMBH | Selscheder Weg 24 | 59846 Sundern | Germany
Phone +49 (0)2933 847-0 | Fax +49 (0)2933 847-100 | E-Mail: info@baulmann.com